ABS (Anti-lock Brake System)

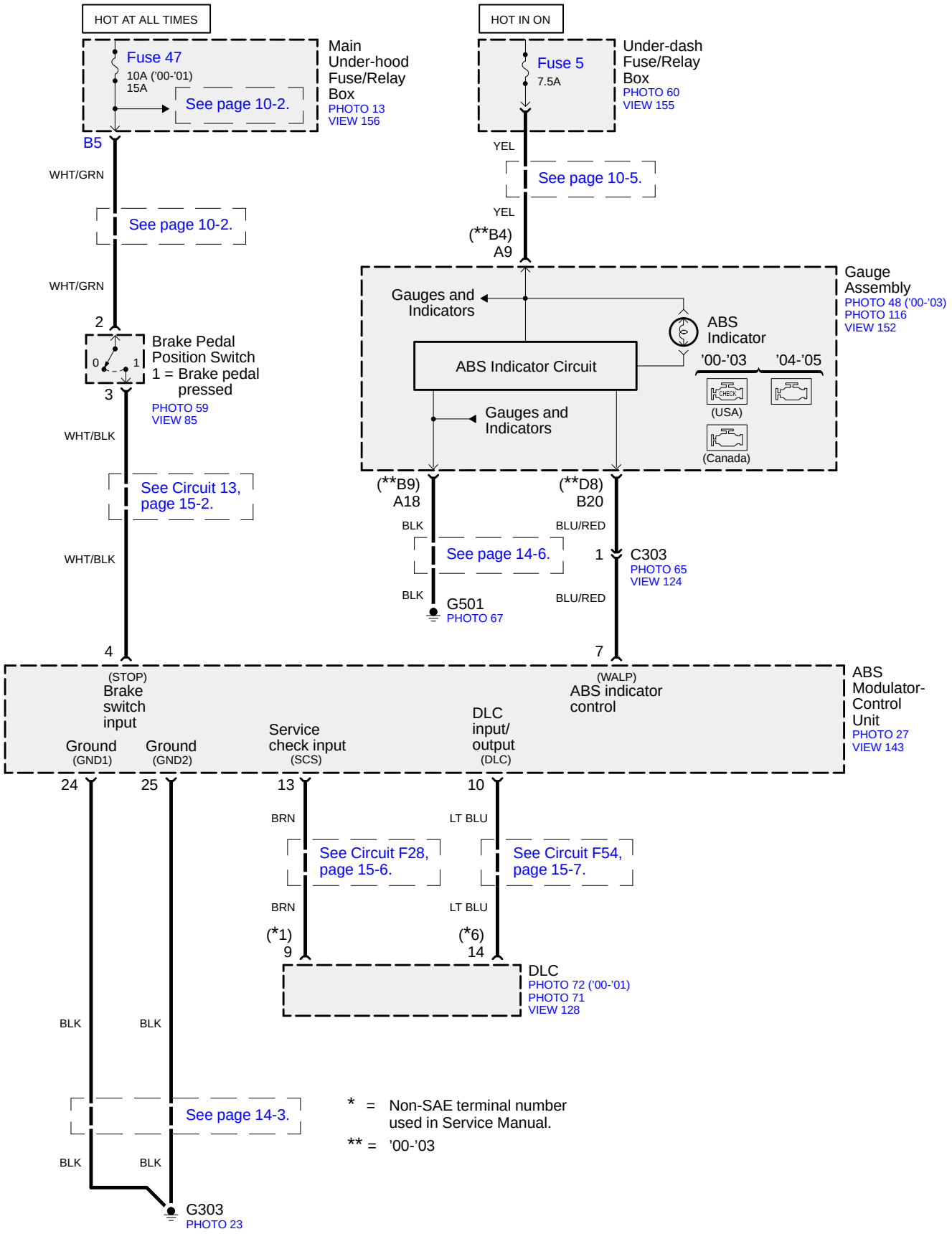

©2005 American Honda Motor Co., Inc.